PIXELab

IP Megapixel Video Surveillance

PXL-TL9600NH-IKZ

Smart AI+



ONVIF

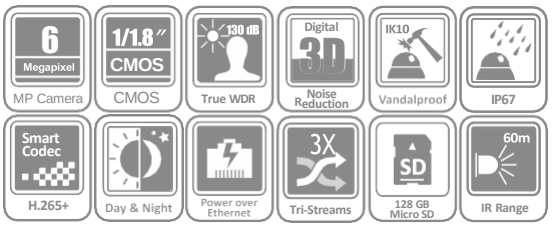

6MP IR Weatherproof Motorised Varifocal IP Camera

- Supports 1.5 Tops computing power, 40 MB system memory, 350 MB smart RAM, and 2 GB eMMC storage for sharing resources
- High quality imaging with 6 MP resolution
- Efficient H.265+ compression technology
- Motorized varifocal lens for easy installation and monitoring
- Clear imaging against strong back light due to 130 dB WDR technology
- Smart Hybrid Light: advanced technology with long range
- Focus on human and vehicle classification based on deep learning
- Water and dust resistant (IP67) and vandal resistant (IK10)
- Onvif supported

Accessories

Included:

Junction Box


Corner Mount	Vertical Pole Mount	Vertical Pole Mount
		

Dimensions

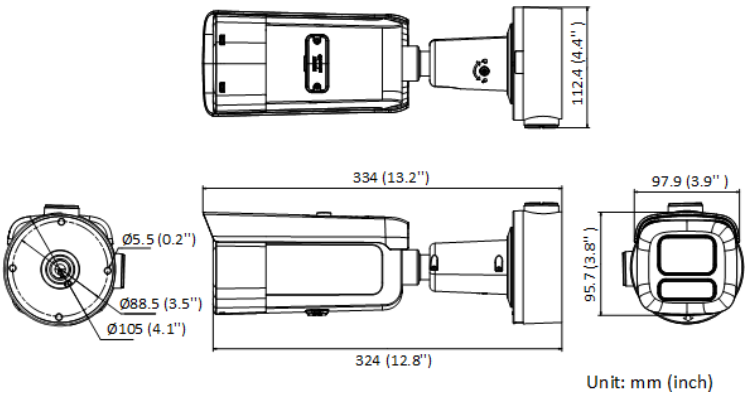

Unit: mm (inch)

ONVIF®
Affiliated Member

* Technical specifications and images are subject to changes

© 2023 PIXELab. All rights reserved

Technical Specifications

Camera	
Image Sensor	1/1.8" Progressive Scan CMOS
Max. Resolution	3200 × 1800
Min. Illumination	Color: 0.0028 Lux @ (F1.2, AGC ON), 0 Lux with light
Shutter Time	1/3 s to 1/100,000 s
Day & Night	IR cut filter
Angle Adjustment	Pan: 0° to 355°, tilt: 0° to 90°, rotate: 0° to 360°
Lens	
Lens Type	Varifocal lens, motorized lens, 2.7 to 13.5 mm and 7 to 35 mm optional
Focal Length & FOV	2.7 to 13.5 mm: horizontal FOV 106° to 35.6°, vertical FOV 55.9° to 20°, diagonal FOV 127.4° to 40.8° 7 to 35 mm: horizontal FOV 34.4° to 12.5°, vertical FOV 19° to 7.1°, diagonal FOV 39.8° to 14.3
Lens Mount	2.7 to 13.5 mm: Ø14; 7 to 35 mm: Integrated
Focus	Auto, Semi-auto, Manual
Iris Type	DC iris
Aperture	F1.6
Depth of Field	1 m to ∞
DORI	
DORI	2.7 to 13.5 mm: D: 68 to 200 m, O: 27 to 79 m, R: 13 to 40 m, I: 6 to 20 m 7 to 35 mm: D: 218 to 580 m, O: 86 to 230 m, R: 43 to 116 m, I: 21 to 58 m
Illuminator	
Supplement Light Type	IR, White Light
Supplement Light Range	2.7 to 13.5 mm: up to 60 m; 7 to 35 mm: up to 120 m
Smart Supplement Light	Yes
IR Wavelength	850 nm
HEOP	
Open Resources	Memory: 40 MB, Smart RAM: 350 MB, eMMC: 2 GB
Computing Power	1.5 TOPS
Open Capability	OpendevSDK
Deep Learning Structure	Caffe, PyTorch, TensorFlow, PaddlePaddle, ONNX
Programming Language	C, C++
Video	
Main Stream	50 Hz: 50 fps (3200 × 1800, 2688 × 1520, 1920 × 1080, 1280 × 720) 60 Hz: 60 fps (3200 × 1800, 2688 × 1520, 1920 × 1080, 1280 × 720)
Sub-Stream	50 Hz: 25 fps (1280 × 720, 640 × 480, 640 × 360) 60 Hz: 30 fps (1280 × 720, 640 × 480, 640 × 360)
Third Stream	50 Hz: 10 fps (1920 × 1080, 1280 × 720, 640 × 480, 640 × 360) 60 Hz: 10 fps (1920 × 1080, 1280 × 720, 640 × 480, 640 × 360) *Third stream is supported under certain settings.
Fourth Stream	50 Hz: 10 fps (1280 × 720, 640 × 480, 640 × 360) 60 Hz: 10 fps (1280 × 720, 640 × 480, 640 × 360) *Fourth stream is supported under certain settings.
Video Compression	Main stream: H.265/H.264/H.264+/H.265+, Sub-stream: H.265/H.264/MJPEG, Third stream: H.265/H.264, Fourth stream: H.265/H.264/MJPEG, *Third stream and fourth stream are supported under certain settings.

Video Bit Rate	32 Kbps to 16 Mbps
H.264 Type	Baseline Profile, Main Profile, High Profile
H.265 Type	Main Profile
Bit Rate Control	CBR, VBR
Scalable Video Coding (SVC)	H.264 and H.265 encoding
Region of Interest (ROI)	5 fixed regions for main stream and sub-stream
Target Cropping	Yes
Audio	
Audio Compression	G.711/G.722.1/G.726/MP2L2/PCM/MP3/AAC-LC
Audio Bit Rate	64 Kbps (G.711ulaw/G.711alaw)/16 Kbps (G.722.1)/16 Kbps (G.726)/32 to 192 Kbps (MP2L2)/8 to 320 Kbps (MP3)/16 to 64 Kbps (AAC-LC)
Audio Sampling Rate	8 kHz/16 kHz/32 kHz/48 kHz
Environment Noise Filtering	Yes
Network	
Protocols	TCP/IP, ICMP, HTTP, HTTPS, FTP, DHCP, DNS, DDNS, RTP, RTSP, RTCP, NTP, UPnP, SMTP, IGMP, 802.1X, QoS, IPv4, IPv6, UDP, Bonjour, SSL/TLS, PPPoE, SFTP, ARP, SNMP, WebSocket, WebSockets, SRTP
Simultaneous Live View	Up to 6 channels
API	Open Network Video Interface (Profile S, Profile G, Profile T), ISAPI, SDK, ISUP
User/Host	Up to 32 users 3 user levels: administrator, operator, and user
Security	Password protection, complicated password, HTTPS encryption, 802.1X authentication (EAP-TLS, EAP-LEAP, EAP-MD5), watermark, IP address filter, basic and digest authentication for HTTP/HTTPS, WSSE and digest authentication for Open Network Video Interface, RTP/RTSP over HTTPS, control timeout settings, security audit log, TLS 1.1/1.2/1.3, host authentication (MAC address)
Network Storage	NAS (NFS, SMB/CIFS), Auto Network Replenishment (ANR), Together with high-end memory card, memory card encryption and health detection are supported.
Client	PIXELAB ISM Professional
Web Browser	Plug-in required live view: IE 10, IE 11, Plug-in free live view: Chrome 57.0+, Firefox 52.0+, Edge 89+, Local service: Chrome 57.0+, Firefox 52.0+, Edge 89+
Image	
Image Parameters Switch	Yes
Image Settings	Rotate mode, saturation, brightness, contrast, sharpness, gain, white balance, adjustable by client software or web browser
Day/Night Switch	Day, Night, Auto, Schedule
Wide Dynamic Range (WDR)	130 dB
Image Enhancement	BLC, HLC, 3D DNR, Defog
SNR	≥ 52 dB
Privacy Mask	4 programmable polygon privacy masks
Interface	
Ethernet Interface	1 RJ45 10 M/100 M self-adaptive Ethernet port
On-Board Storage	Built-in memory card slot, support microSD/microSDHC/microSDXC card, up to 512 GB
Audio	1 input (line in), two-core terminal block, max. input amplitude: 3.3 Vpp, input impedance: 4.7 KΩ, interface type: non-equilibrium, 1 output (line out), two-core terminal block, max. output amplitude: 3.3 Vpp, output impedance: 100 Ω, interface type: non-equilibrium

Alarm	2 inputs, 2 outputs (max. 24 VDC/24 VAC, 1 A)
Reset Key	Yes
Power Output	24 VDC, max. 1A
Event	
Basic Event	Motion detection (support alarm triggering by specified target types (human and vehicle)), video tampering alarm, exception
Smart Event	Scene change detection, audio exception detection, defocus detection
Linkage	Upload to FTP/NAS/memory card, notify surveillance center, send email, trigger recording, trigger capture, trigger alarm output, audible warning
Deep Learning Function	
Face Capture	Yes
People Counting	Yes
Perimeter Protection	Line crossing, intrusion, region entrance, region exiting Support alarm triggering by specified target types (human and vehicle)
General	
Power	24 VDC ± 25%, 1 A, max. 14.5 W, Ø5.5 mm coaxial power plug, reverse polarity protection, PoE: IEEE 802.3at, Class 4, max. 18 W
Material	Front cover: Metal, body: Metal, bracket: Metal
Dimension	334 mm × 97.9 mm × 95.7 mm (13.2" × 3.9" × 3.8")
Package Dimension	386 mm × 190 mm × 180 mm (15.2" × 7.5" × 7.1")
Weight	Approx. 1515 g (3.3 lb.)
With Package Weight	Approx. 2329 g (5.1 lb.)
General Function	Heartbeat, anti-banding, mirror, flash log, password reset via email, pixel counter
Protection	IP 67, IK 10
Lightning conductor	6.2 kV
Storage Conditions	-30 °C to 60 °C (-22 °F to 140 °F). Humidity 95% or less (non-condensing)
Startup and Operating Conditions	-30 °C to 85 °C (-22 °F to 185 °F). Humidity 95% or less (non-condensing)
Language	33 languages: English, Russian, Estonian, Bulgarian, Hungarian, Greek, German, Italian, Czech, Slovak, French, Polish, Dutch, Portuguese, Spanish, Romanian, Danish, Swedish, Norwegian, Finnish, Croatian, Slovenian, Serbian, Turkish, Korean, Traditional Chinese, Thai, Vietnamese, Japanese, Latvian, Lithuanian, Portuguese (Brazil), Ukrainian